# SG (P30) 充油壓力表 ( 不鏽鋼內機 )Stainless steel pressure guage

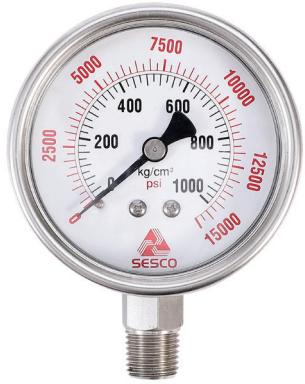


| | |
|---|---|
| 精度 Accuracy class | ±1.0% F.S ; 2.5"±1.6% F.S |
| 壓力範圍 Pressure range | -1 ~ 0 bar ; 0~1000 bar |
| 環境溫度 Ambient temperature | -25° C ~ 65° C |
| 流體溫度 Process fluid temperature | Max 100° C ( 無填充 Unfilled)<br>0° C ~ 65° C ( 填充甘油 Glycerine)<br>-20° C ~ 65° C ( 填充矽油 Silicon oil) |
| 防水等級 Protection degree | IP 67 |
| 外殼標準材質 Case | SUS304 or SUS316 (4"only) |
| 接頭標準材質 Socket material | SUS316 |
| 巴登管材質 Bourdon tube | SUS316 |
| 內機標準材質 Movement | SUS304 |
| 鏡面材質 Window | 安全玻璃 Safty glass |

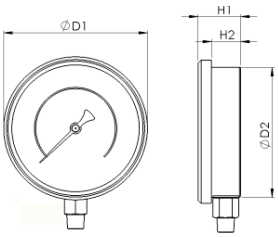


**Type A**
直立底接 Lower connection

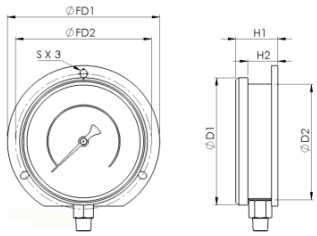


**Type C**
直立安裝 , 附背緣
Surface mounting, back flange ; lowerconnection.

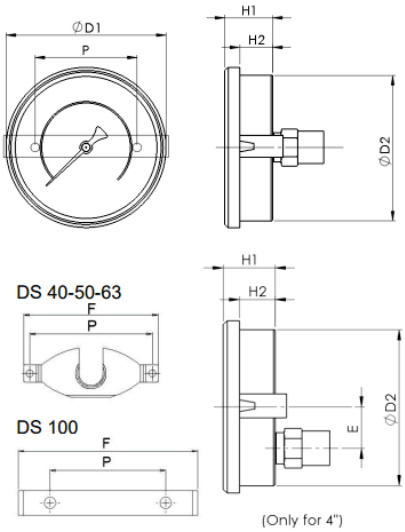


**Type B**
埋入安裝 , 附固定架 , 背部接頭
Flush mounting, with "U" clamp; back connection

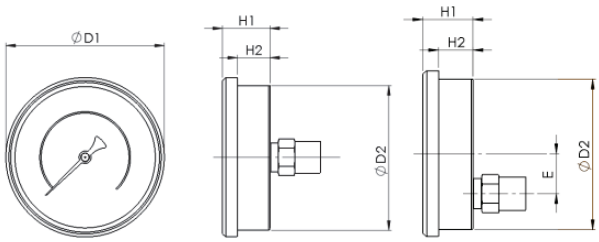


**Type D**
背接安裝 Back connection

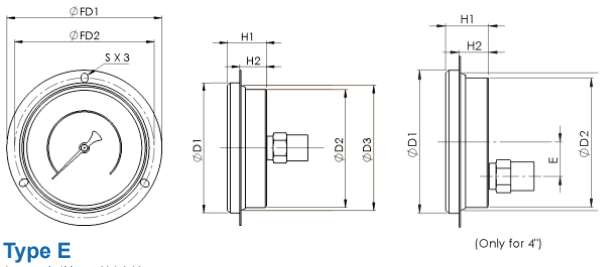


**Type E**
埋入安裝 , 附前緣
Flush mounting, front flange; back connection

## 外觀尺寸

| 面徑 Dial size | 接續螺紋尺寸 Connection size | 接續螺紋種類 Connection type | 安裝方式 Mounting | D1 | D2 | D3 | F | H1 | H2 | FD1 | FD2 | S | P | E |
|---|---|---|---|---|---|---|---|---|---|---|---|---|---|---|
| 2.5" | 1/8", 1/4" 3/8" | PF PT NPT | A ( 直立式 Lower connection) | 69.5 | 62.5 | --- | --- | 30.5 | 23 | --- | --- | --- | --- | --- |
| | | | B ( 背接式附金具 Back connection with clamp) | 69.5 | 62.5 | --- | 90 | 30 | 23 | --- | --- | --- | 83 | --- |
| | | | C ( 直立附背緣 Lower connection with flange) | 69.5 | 62.5 | --- | --- | 35 | 28 | 87.7 | 76.5 | 7.8x6 | --- | --- |
| | | | D ( 背接式 Back connection) | 69.5 | 62.5 | --- | --- | 30 | 23 | --- | --- | --- | --- | --- |
| | | | E ( 埋入式 Back connection with flange) | 69.5 | 62.5 | 67 | --- | 30 | 22 | 85 | 76.3 | 5.5x4.5 | --- | --- |
| 4" | 1/4",3/8", 1/2" | PF PT NPT | A ( 直立式 Lower connection) | 110 | 101 | --- | --- | 36.5 | 27 | --- | --- | --- | --- | --- |
| | | | B ( 背接式附金具 Back connection with clamp) | 110 | 101 | --- | 110 | 30 | 25 | --- | --- | --- | 71 | 26 (Only for 4") |
| | | | C ( 直立附背緣 Lower connection with flange) | 110 | 101 | --- | --- | 40.5 | 31.5 | 131.3 | 116.2 | 7.8x6 | --- | --- |
| | | | D ( 背接式 Back connection) | 110 | 101 | --- | --- | 35 | 25 | --- | --- | --- | --- | 26 (Only for 4") |
| | | | E ( 埋入式 Back connection with flange) | 110 | 101 | 106 | --- | 30 | 24 | 132 | 118 | 7.8x6 | --- | 26 (Only for 4") |

## 選購方式

| 型號 Model | 充油 Fill | 安裝方式 Mounting | 面徑 Dial size | 壓力範圍 Pressure range | 接續螺紋尺寸 Connection size | 接續螺紋種類 Connection type |
|---|---|---|---|---|---|---|
| P30(SG) | 2= 可充但不充 Fillable | A ( 直立式 Lower connection) | C=2.5" | | | |
| | 3= 充油 Filled | B ( 背接式附金具 Back connection with clamp) | | | | |
| | | C ( 直立附背緣 Lower connection with flange) | E=4" | | | |
| | | D ( 背接式 Back connection) | | | | |
| | | E ( 埋入式 Back connection with flange) | | | | |